ADJUSTABLE +20V/−20V SUPPLY 1A

TO DO:
1. Block Diagram

Block Diagram

File: Block Diagram.kicad_sch

Power Input

File: Power Input.kicad_sch

Buck & Inverting Buck

File: Buck & Inverting Buck.kicad_sch

DRAWN BY: DRELECTRONICS
DESIGNED BY: DRELECTRONICS
Dean Riccio

Sheet: /
File: 20V & −20V PS.kicad_sch

Title: +20V/−20V Power Supply

Size: A5	Date: 2025−11−07	**Rev: 0**
KiCad E.D.A. 9.0.7		Id: 1/4

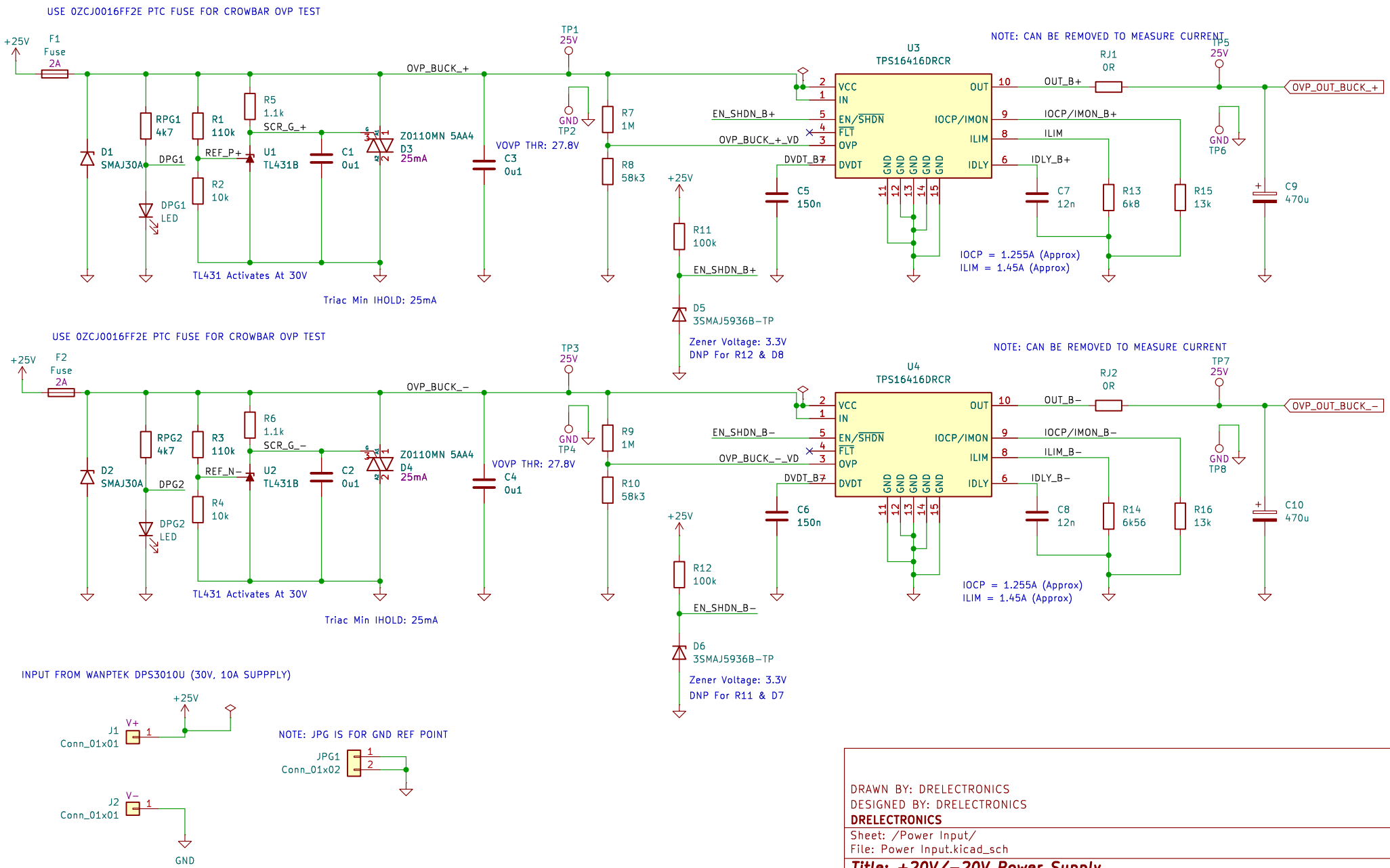

DRAWN BY: DRELECTRONICS
DESIGNED BY: DRELECTRONICS
DRELECTRONICS

Sheet: /Power Input/
File: Power Input.kicad_sch

Title: +20V/-20V Power Supply

Size: A4	Date: 2025-11-16	**Rev: 0**
KiCad E.D.A. 9.0.7		Id: 2/4

DRAWN BY: DRELECTRONICS
DESIGNED BY: DRELECTRONICS
DRELECTRONICS

Sheet: /Block Diagram/
File: Block Diagram.kicad_sch

Title: +20V/−20V Power Supply

Size: A4	Date: 2026-02-02	**Rev: 0**
KiCad E.D.A. 9.0.7		Id: 4/4

REFER TO CALCULATIONS SPREADSHEET FOR DETAILS
REGARDING COMPONENT SELECTION.(HEAVILY BASED ON TI'S WEBENCH)

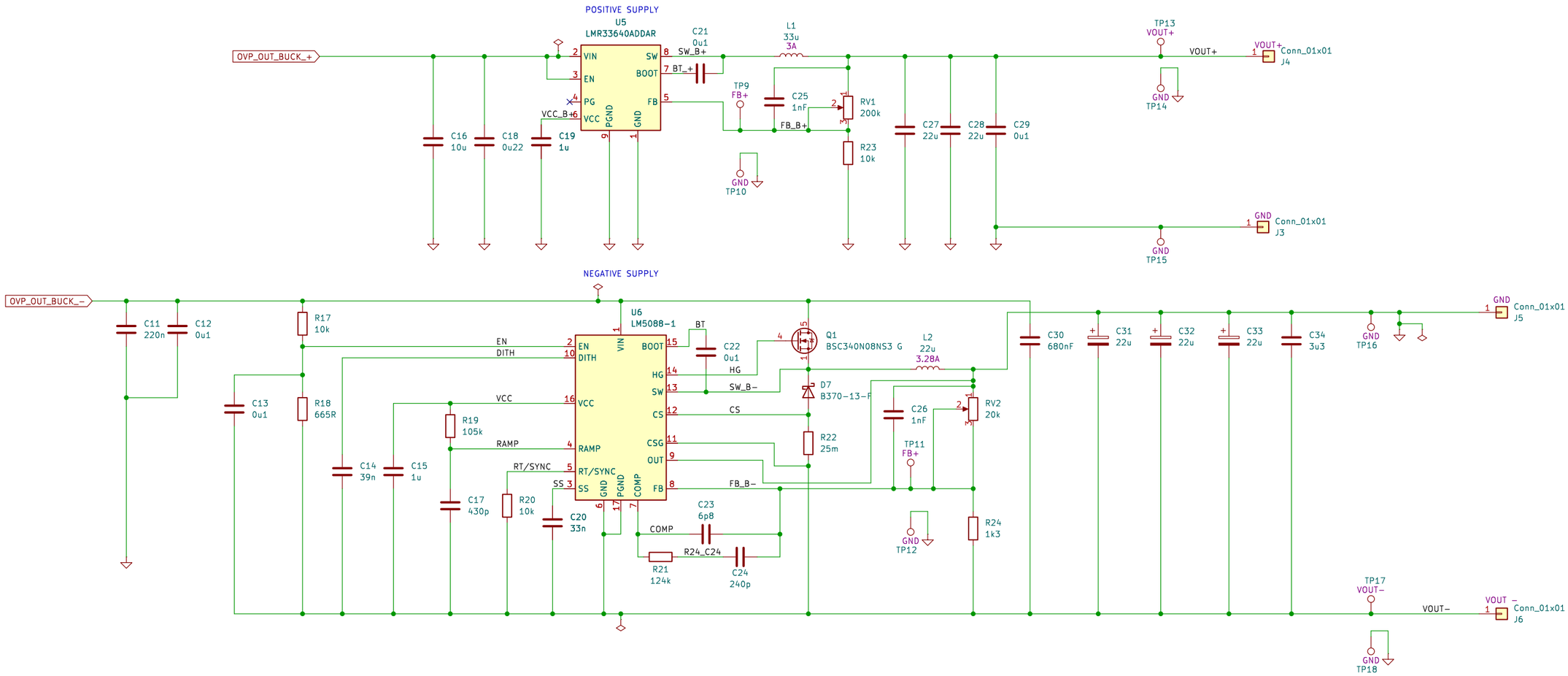

DRAWN BY: DRELECTRONICS
DESIGNED BY: DRELECTRONICS
DRELECTRONICS

Sheet: /Buck & Inverting Buck/
File: Buck & Inverting Buck.kicad_sch

Title: +20V/−20V Power Supply

Size: A3	Date: 2025-11-16	**Rev: 0**
KiCad E.D.A. 9.0.7		Id: 4/4